GAZELLE®

G2510 Mobile Aluminium work platform

Operating manuals

maintenance information

Directory

Ⅰ.The safety instructions.....4

1.1 Dangerous notified.....4

1.1.1 The risk of electric shock 4

1.1.2 Danger of capsizing 6

1.1.3 The risk of falling.....8

1.1.4 Danger of a collision.....8

1.1.5 Crushing Hazard.....9

1.1.6 The risk of component damage 9

1.1.7 The risk of explosion and fire.....9

1.1.8 The risk of damage to the machine 9

1.1.9 Risk of injury.....10

1.2 Battery Safety Instructions 10

1.2.1 The danger of explosion 10

1.2.2 The risk of component damage 10

1.2.3 The risk of electric shock 11

1.2.4 Upgrade when the danger 11

Ⅱ. The legend.....12

Ground controllers 13

Platform Controller 14

Transportation, improve 14

Precautions 14

Safety matters 14

Ⅲ.The matters before use 16

Basic principles 16

3.1 Check before use. 17

3.2 Routine maintenance 18

3.3 Workplace inspection 18

Ⅳ. The instructions for use 19

Basic principles 19

4.1 Boot 19

4.2 Emergency stop / shutdown 20

4.3 Platform rise 20

4.4 Platform lowering 20

4.5 Storage of 21

4.6 Battery and charger 21

Precautions 21

Charging matters 21

V. Specifications 23

Ⅵ. Electrical schematics 25

Ⅶ.Hydraulic valve block schematic 26

Ⅷ. Regular care and maintenance 27

Ⅸ. Faults and troubleshooting 27

Ⅹ. Maintenance record form 29

Ⅰ.The safety instructions

1.1 Dangerous notified

◆Please carefully read the instructions in the manual and safety instructions, Any violation of operating requirements, All the consequences arising from, Own responsibility by the operator.

◆Before operation，Make sure you understand and practice personal rules of safe operation in the operating manual machine：

(1) Avoid hazardous situations,

◆Know and understand the safety instructions before proceeding to the next step.

(2) Always perform pre-use check,

(3) Workplace inspection,

(4) According to the design intent of the machine to use the machine.

◆Should read, understand and follow the manufacturer's instructions and safety instructions - safety manual, operating manual and machine labeled stickers.

◆Should read, understand and comply with user safety instructions and work site regulations.

◆Required to read, understand and comply with all applicable government regulations.

◆Users appropriate safe machine operation training.

1.1.1 The risk of electric shock

●This machine is not insulated, and not provide protection from contact with or close to the wire.

Follow the applicable government regulations and the following table shows, keep a safe distance from the machine with wires.

Shortest safety close to the distance

Voltage range（Phase to phase）	Shortest safety close to the distance（Meter）
0～50 KV	3
50～200 KV	5
200～350 KV	6
350～500 KV	8
500～750 KV	11
750～1000 KV	14

●Move to the platform, the wire swing or relaxation, Beware of strong winds or gusts.

●If the machine has come into contact with live wires, away from the machine. Cut off the power before the personnel on the ground or platform must not touch or operate the machine.

●Do not use the machine in the outdoor lightning or storms.

●Do welding machine as a ground.

1.1.2 Danger of capsizing

●Personnel, equipment and materials shall not exceed the maximum carrying capacity of the platform.

The platform maximum carrying amount

Model	The platform maximum carrying amount	Its maximum staff
G2510	125KG	1

●Only in a sturdy, flat on the ground in order to enhance the platform.

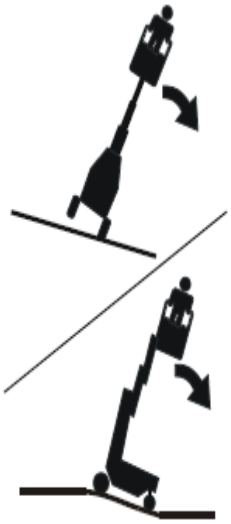

●Do not alter or prohibit the use of limit switches.

●Do not enhance the platform when the wind speed may exceed **12.5m/s**. Platform to enhance more than **12.5m/s** wind speed, care should be taken to reduce the platform and do not continue to operate the machine.

●Do not operate the machine in strong winds or gusts, not to increase the surface area of the platform or the load. Exposed to the wind in the area will reduce the stability of the machine.

●Do not use the platform to get caught, stuck or near other objects that hinder its normal movement the platform controller release platform. If you intend to use the the ground throttle release platform, you need the staff left on the platform before operation.

●Do not change or damage to any parts of the machine that may affect the security and stability.

●Without the prior written permission of the manufacturer, do not modify or alter the altitude vehicles. Additional means for tools or other material is placed on the platform, pedals or guardrail installed will increase Platform weight and surface area or an increase in the load.

●Do not push and pull on the platform outside the object.

Maximum allowable lateral force

Model	Maximum allowable lateral force	Its maximum staff
G2510	**200N**	**1**

●Should not be placed on any part of this machine, they finally saw fixed or overhanging loads.

●Do not use a ladder or scaffolding on the platform or eyes on any parts of the machine.

●Do not use the machine in mobile or surface or vehicle.

●The machine can only transport distribution is uniform and can be moved by the people on the platform security tools and materials.

●Make sure all tires in good condition, bolts, nuts installed correctly.

●Do not use the battery smaller than the original weight. Battery not only played a the counterweight role, and stability is essential to keep the machine. Each battery weight must reach **16.5KG**.

●Do not use the machine as a crane.

●Do not let the platform contact with adjacent components.

●Do not be bundled with the platform in the adjacent member.

●Do not load is placed on the outside of the periphery of the platform.

1.1.3 The risk of falling

●The guard rail system provides fall protection. Workplace or requires the use of personal fall protection equipment, use of safety equipment should be based on the protection equipment manufacturer's instructions and applicable government requirements on the platform

●Do not sit, stand or climb on the fence on the platform, at any time should be maintained securely standing on the platform floor.

●When the platform is enhanced, not down from the platform.

●Keep the platform floors clean, to prevent slipping.

●The entrance door is closed before the operation.

●Detect no fence or entry can not be properly installed to ensure safe operation, do not operate the machine.

1.1.4 Danger of a collision

When moving the machine, you should pay attention to the presence of the line-of-sight and blind spots.

●Check the work area to avoid overhead obstructions or other possible dangers.

●When the When seize platform guardrail, Beware of have squeeze the danger.

●Only the platform lower area of no persons or obstacles to decrease the platform.

●Do not operate the machine in any crane or moving overhead machinery in online, unless the crane controller is locked or has taken precautions to prevent any potential collision.

1.1.5 Crushing Hazard

●Hands and arms should not be close to the machine with crushing hazard areas.

1.1.6 The risk of component damage

●Do welding machine as a ground.

1.1.7 The risk of explosion and fire

●In dangerous or explosive gases or particles may be present, and not to use the machine, or to charge the battery.

1.1.8 The risk of damage to the machine

●Do not use a damaged or malfunctioning machine.

●Before each time you change jobs, should be thoroughly machine pre-use check. Damage or failure of the machine should be tagged immediately, and stop using it.

●Ensure all maintenance operations carried out in accordance with the provisions of the manual.

●Ensure the appropriate stickers position and easily identifiable.

1.1.9 Risk of injury

●Do not operate the machine when the case of hydraulic oil spill. Hydraulic oil oil spill may penetrate or burn the skin.

●Any error contact with the lid following parts may result in serious injury. Only trained service personnel to repair.

Recommendation: only during the pre-operational checks and checks by the operator. During the operation, all of the lid must be kept closed and locked state.

1.2 Battery Safety Instructions

1.2.1 The danger of explosion

●Prohibited sparks, flames and lighted cigarettes near the battery, the battery can release explosive gases.

●Charger rack should be kept open during the entire charging.

●Do not use the tools that may cause sparks to contact the battery terminals or cable clamp.

1.2.2 The risk of component damage

●Do not use greater than **12V** battery charger to charge the battery.

●During charging the battery or charger is exposed to water or rain.

1.2.3 The risk of electric shock

●Only the battery charger is connected to the AC three-wire grounded power outlet.

●Daily check the cables and wires for damage. If there is damage to be replaced before operating before operation.

●Avoid contact with the battery terminals and electric shock, remove all rings, watches and other metal jewelry before operation.

1.2.4 Upgrade when the danger

●Enhance the battery, make sure that the appropriate number of personnel and upgrading methods.

Ⅱ. The legend

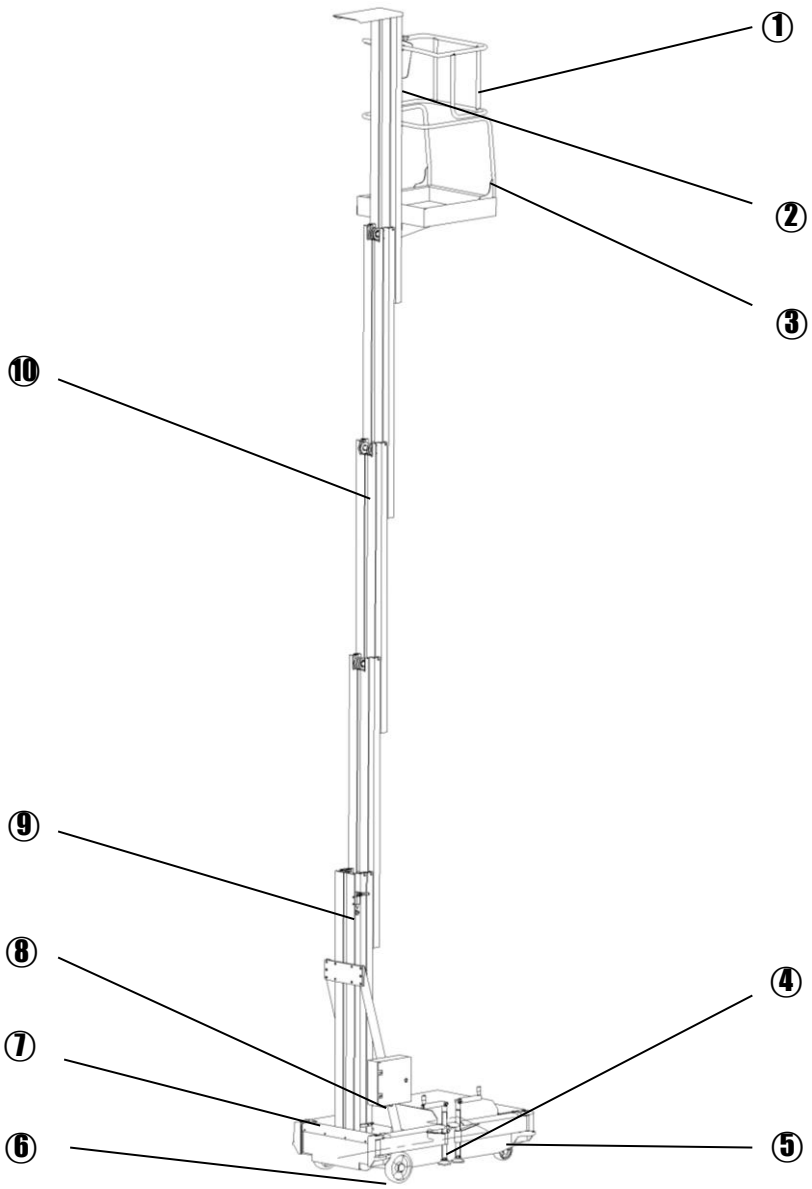

1. Platform doors
2. Platform Controller
3. Guardrail
4. Manual drop valve
6. Wheel
7. Charger
8. Ground controllers
9. Travel switch

Ground controllers

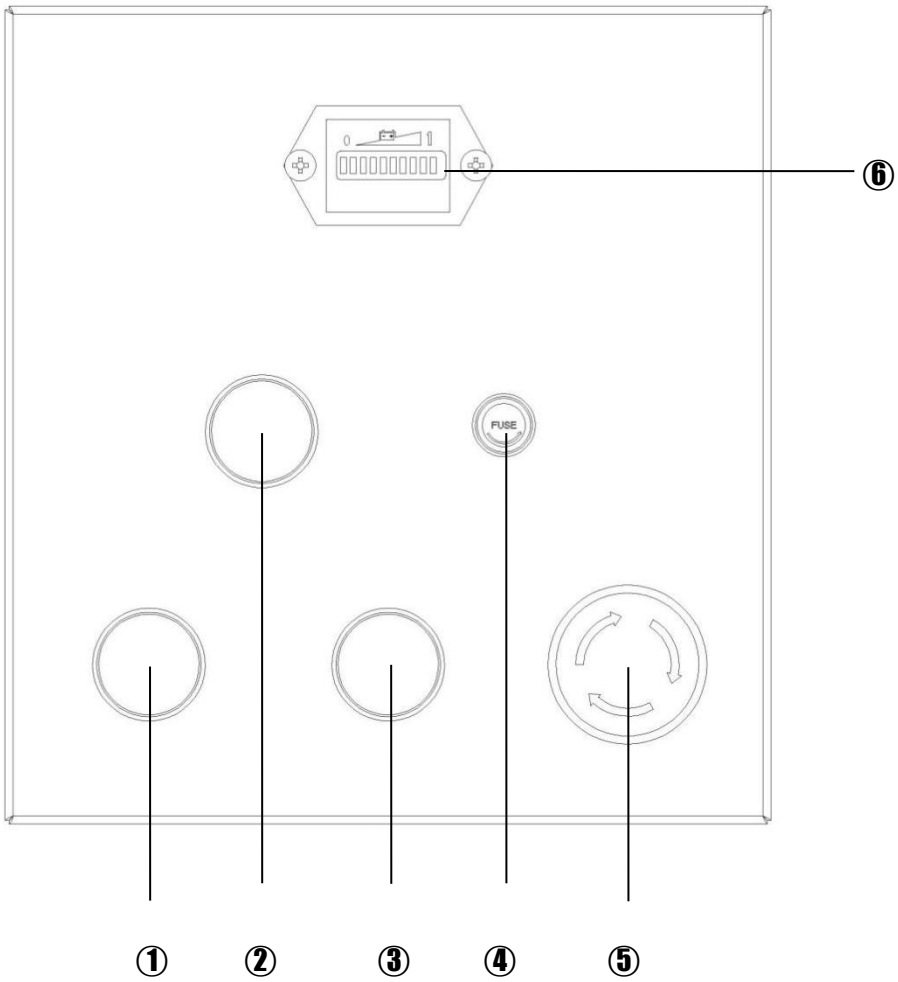

1. The green "platform rise" button
2. Power Indicator
3. The yellow "platform down" button
4. Circuit breaker
5. Red "emergency stop" button
6. Charge gauge

Platform Controller

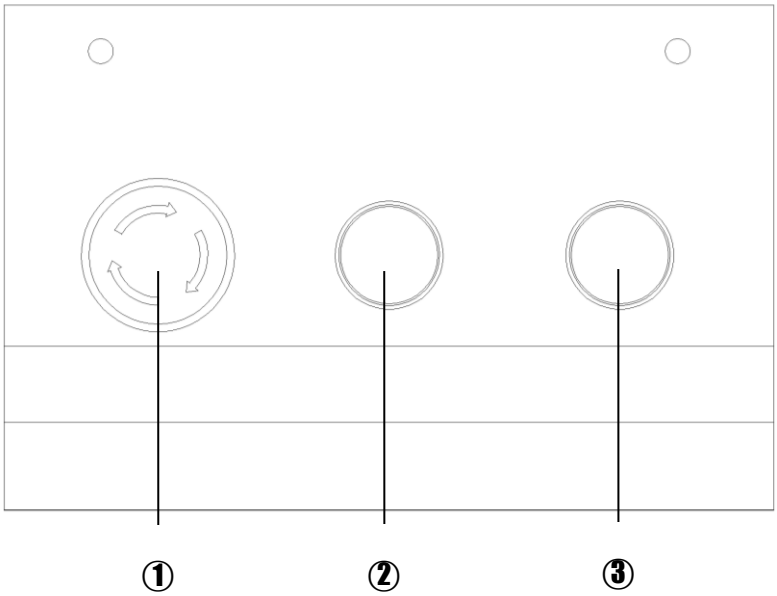

1. Emergency stop button **2**. Platform up button **3**. Platform lowering button

Transportation, improve

Precautions

1. The transport vehicle must be parked on a level surface.

2. Loading or unloading machinery, transport vehicles must be secured to prevent rolling.

3. Ensure that the vehicle capacity, loading surfaces enough to support the weight of the machine. Specific weight refer to the nameplate on the machine.

4. Transportation winch their description of the loading and unloading machine.

Safety matters

1. Only qualified forklift loaders to handling machine.

2. Transportation, press the "emergency stop" button.

3. A comprehensive inspection of the machine, to prevent the machine from loose parts.

4. Confirmation forklift sufficient to enhance the weight of the machine.

5. When transporting the machine by uneven pavement, it should be noted that the height of the machine, to prevent damage to collide with the obstacle.

6. Enhance fork should favor the mast side, to prevent the weight of the machine is not balanced, caused by overturning.

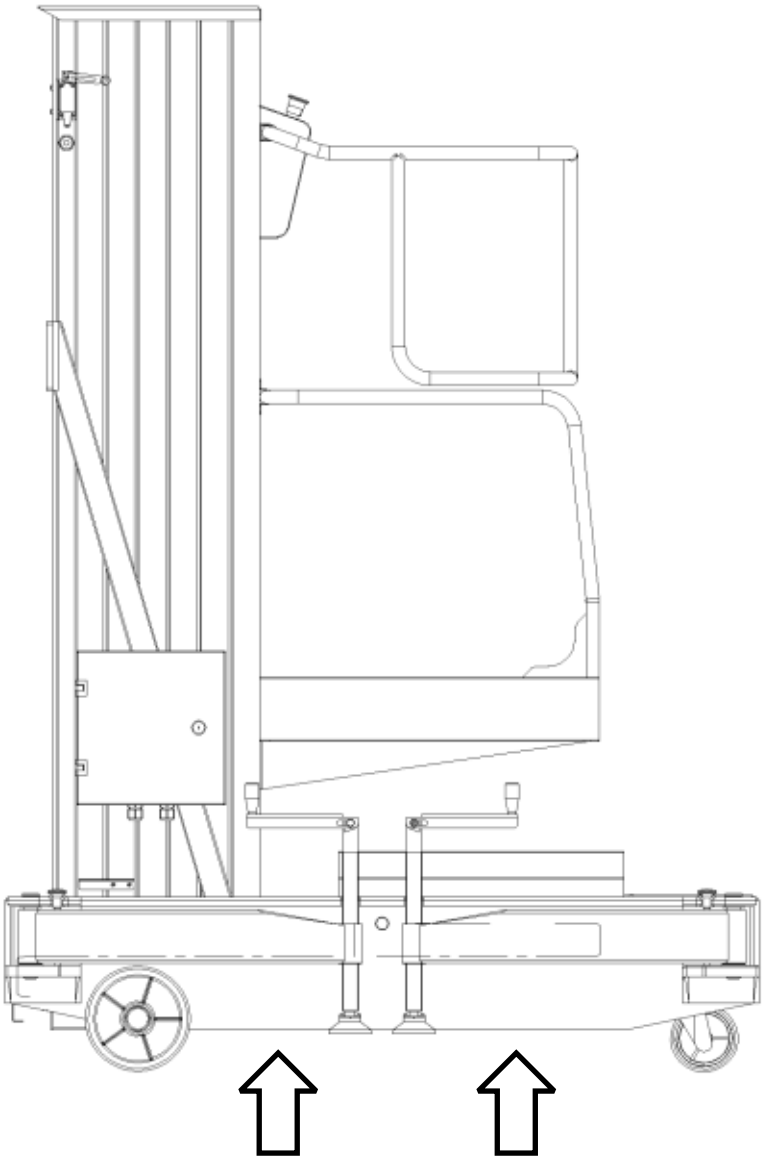

The machine transport should be held up at the bottom of

Ⅲ.The matters before use

◆Before operation，Make sure you understand and practice personal rules of safe operation in the operating manual machine：

（1） Avoid hazardous situations,

◆Know and understand the safety instructions before proceeding to the next step.

（2） Always perform pre-use check,

（3） Workplace inspection,

（4） According to the design intent of the machine to use the machine.

Basic principles

◆Always perform a pre-use check and regular maintenance is the operator's responsibility.

◆Pre-use check is a visual inspection performed by the operator prior to each change jobs. The purpose of the inspection machine operator can be found in operation before the existence of obvious problems.

◆Pre-use check can also be used to determine the need for routine maintenance program, but the operator can only perform routine maintenance items specified in this manual.

◆Please refer to the following list and check each project.

◆If damage is found or the factory state any unauthorized changes should be marked on the machine and stop using.

◆According to the manufacturer's specifications, only qualified service personnel to repair the machine. In the

repair has been completed, the operator must check once again perform pre-use check.

◆According to the requirements listed on the manufacturer's requirements and responsibilities manuals, qualified service personnel should perform regular maintenance checks.

3.1 Check before use.

●Ensure that the operating manual, safety and responsibilities manuals intact and legible.

●Ensure that all standard paste clear, easy to read and the appropriate location.

●Check for hydraulic oil leaks and proper oil level. Needed injection of hydraulic oil.

●Check the following components or areas for damage, improper installation or parts missing and unauthorized changes:

(1) **Electrical components, wiring or cable**

(2) **Hydraulic power unit, fuel tank, hose, fittings, hydraulic cylinders and integrated valve block**

(3) **Battery**

(4) **Tires**

(5) **Limit switch**

(6) **Platform entrance door**

●Check the machine to ensure that no following problems:

(1) **Ensure that the weld or structural components without cracks phenomenon**

(2) **Ensure the machine without a concave beams or damage phenomena**

(3) **Ensure machine no serious rust, corrosion or oxidation phenomena**

(4) **To ensure that no structural components or other critical parts missing**

(5) **Ensure fasteners and pins in the improper position or not tighten the phenomenon**

3. 2 Routine maintenance

◆The operator can only perform routine maintenance projects in this manual.

Hydraulic oil level maintenance

●This maintenance can make the hydraulic oil is maintained in a suitable oil critical position on the machine work. Is inappropriate bit of oil such as hydraulic oil, will damage the hydraulic components. By a conventional inspection, the operator is able to determine the changes in the hydraulic oil, and this change can be prompted to the hydraulic system if a problem exists.

Note: 1. The platform collapsed state, manually increase platform to the safety arm to operate this program.

2. Determined by a conventional check the oil level in the hydraulic oil.

3. Add hydraulic oil according to the applicable specifications. (Do not add excess)

3. 3 Workplace inspection

Aware of and avoid the following hazardous situations occur:

1. Offs or holes

2. Protrusions, floor obstructions or debris

3. An inclined surface

4. Firm or smooth surface

5. A dangerous position

6. Withstand the machine total load force exerted surface supports

7. Wind and weather conditions

8. Unauthorized personnel appears

9. Other possible unsafe conditions

Ⅳ. The instructions for use

◆Before operation，Make sure you understand and practice personal rules of safe operation in the operating manual machine：

（1） Avoid hazardous situations,

◆Know and understand the safety instructions before proceeding to the next step.

（2） Always perform pre-use check,

（3） Workplace inspection,

（4） According to the design intent of the machine to use the machine.

Basic principles

◆Using the description the portion providing specific description of various aspects for use of the machine. Follow the operating manual, security manual and responsibilities manuals on all safety rules and instructions of the operator's duties.

◆In addition to the personnel and tools and materials to enhance air workplace, this machine is used for other purposes is unsafe.

◆Only trained and authorized personnel shall be allowed to use the machine at different times in the same work shift, more than one operator using the same machine, then they must be qualified operating personnel and follow the operating manual, safety manual and all the safety rules and guidance responsibilities manual.

4.1 Boot

1. The controllers on the ground and platform red "emergency stop" button to pull out to the open position.

4.2 Emergency stop / shutdown

1. Press the controller on the ground or platform red "emergency stop" pushed to the off position.

●**If you press the "emergency stop" button still function in the run, you should repair the function.**

4.3 Platform rise

●**METHODS: GROUND CONTROLLER**

1. To boot.
2. To convert the switch to ground controllers.
3. Press "the platform up" button.

●**METHOD TWO: PLATFORM CONTROLLER**

1. To boot.
2. The mode selection switch to platform control mode.
3. Press the the platform green "platform up" button.

4.4 Platform lowering

●**METHODS: GROUND CONTROLLER**

1. To boot.
2. The change over switch to go to the ground control mode.
3. Yellow ground "the platform down" button is pressed.

●**METHOD TWO: PLATFORM CONTROLLER**

1. To boot.

2. To convert the switch to platform control mode.

3. Press platform yellow "the platform down" button

Lifting speed of adjustment

1. **When the platform rise / fall too fast / too slow, may be appropriate to adjust the throttle to control the vertical speed of the platform.**

4.5 Storage of

1. The platform should be in a collapsed state.

2. Select a safe parking position is firm, level ground, and there are no obstacles and avoid busy transport.

3. The locking wheel.

4. To charge the battery.

4. 6 Battery and charger

Precautions

1. Does not use an external charger or booster battery.

2. In the universal good place for battery charging.

3. Using the charger stickers correctly input AC voltage to be charged.

4. You must use the approved battery and charger.

Charging matters

1. To ensure that the battery is connected before charging.

2. Open the battery door, battery ventilation should be maintained throughout the charging process.

3. The battery charger is connected to a grounded AC circuit.

4. Full battery charger will give directions.

Note: If you do not use the machine for a long time, on a regular basis to charge the battery. Failure to do so will cause battery damage.

V. Specifications

●Machine specifications

Specification	G2510		
Overall weight	490（AC）/525（DC）KG		
Overall height	2. 04m		
Overall Width	0. 82m		
Overall length	1. 42m		
Maximum tilt angle	/		
Maximum gradeability	/		
Traveling speed - Shoulong state	/		
Travel speed - Lifting	/		
Minimum ground clearance	0. 06m		
Wheelbase	1. 11m		
Front wheel	5in		
Rear wheel	¢180*50		

●Electrical Specifications

Specification	G2510		
Battery	2-12V/65Ah		
Charger	12V/15A		

Drive motor	/
Lifting motor (AC)	110-230VAC/0. 75KW
Lifting Motor (DC)	12VDC/1. 5KW

●Platform data

Specification	G2510		
Safe Working Load	125KG		
Extend the platform working load	/		
Platform size	0. 63*0. 64m		
Platform extension size	/		
Maximum working height	12m		
Maximum platform height	10m		
Speed(Down/UP)	46/40sec		

Ⅵ. Electrical schematics

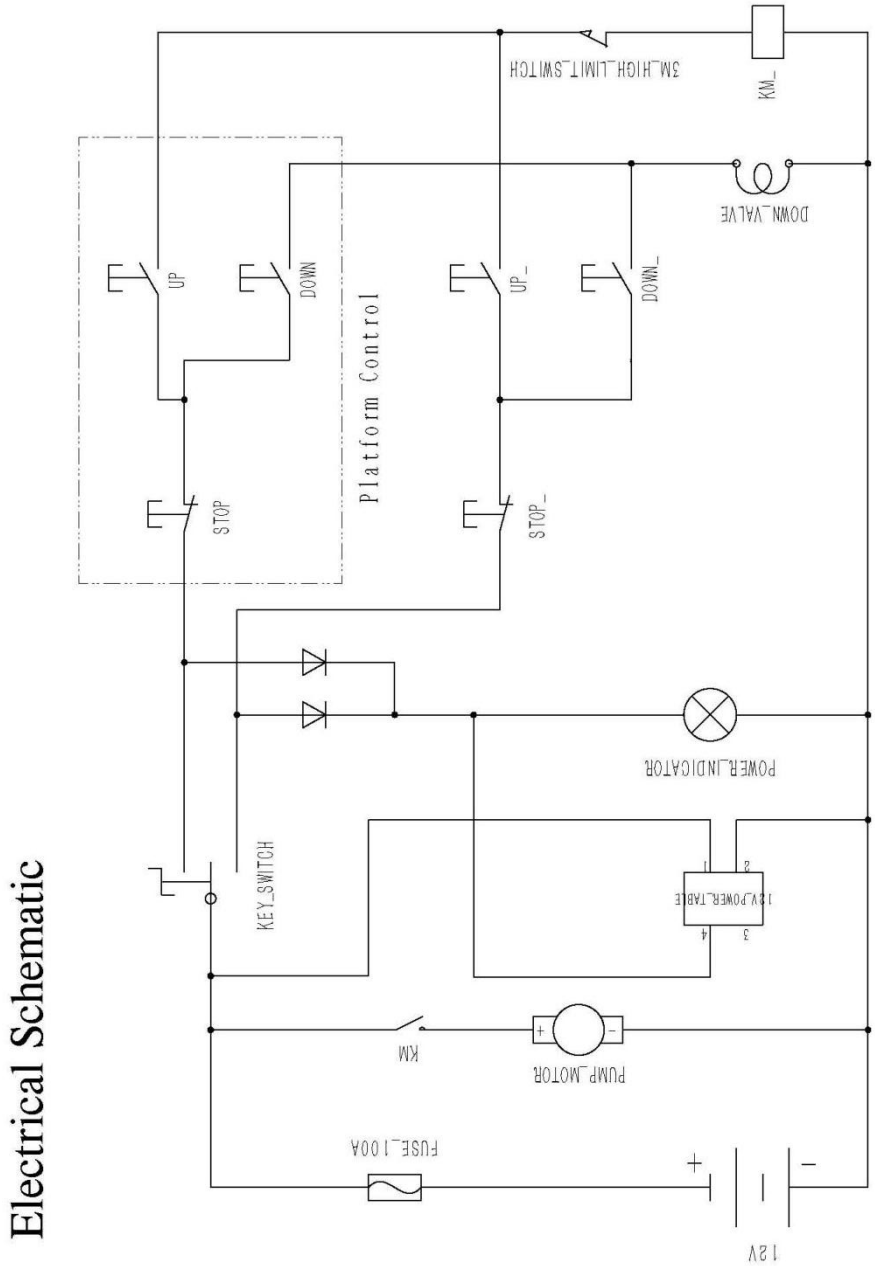

Ⅶ.Hydraulic valve block schematic

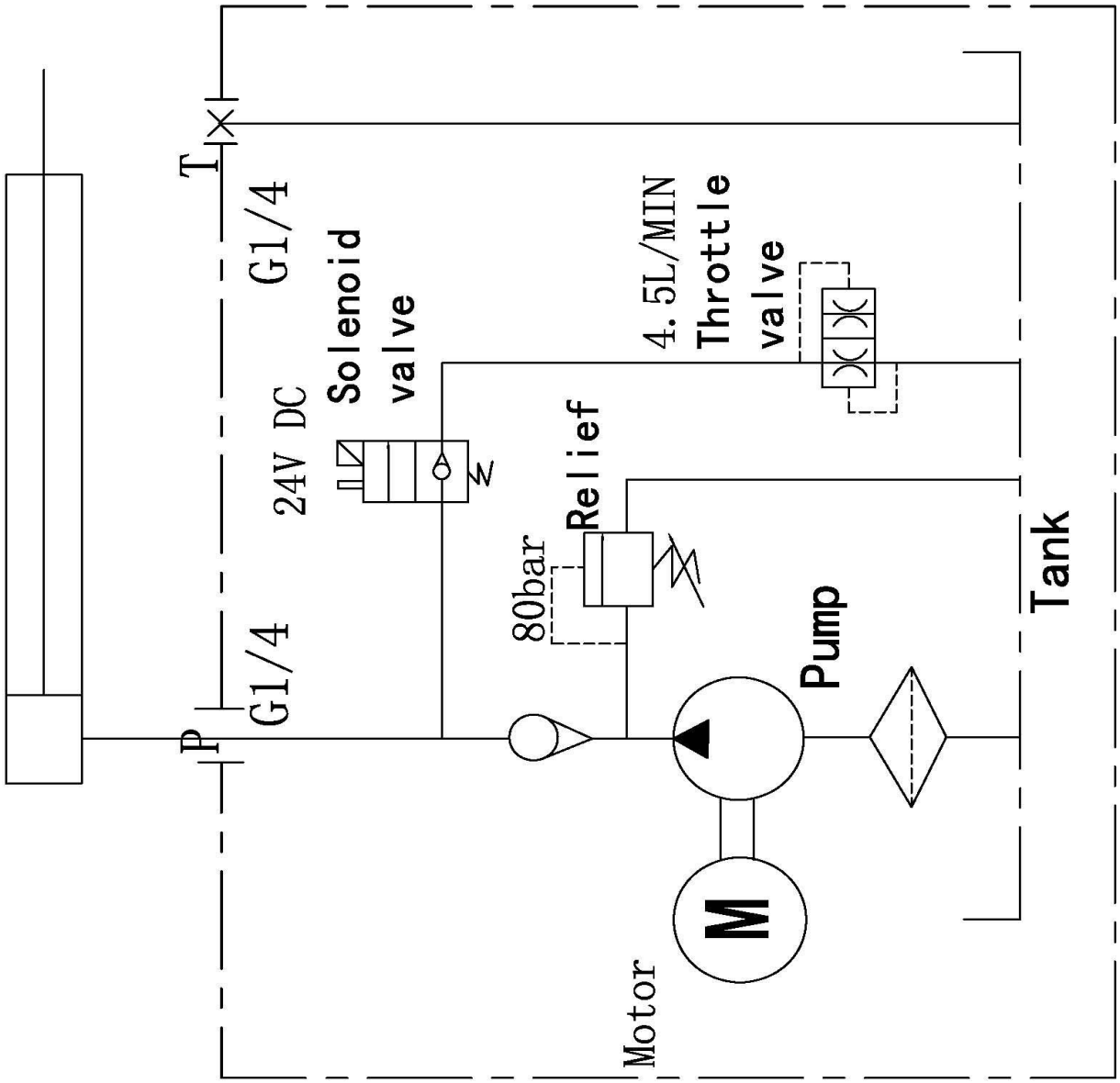

Ⅷ. Regular care and maintenance

●Quarterly, annual and biennial maintenance must be performed by trained this machine maintenance training and qualified personnel. Use regular routine examination, and remove the abnormal phenomenon, do not use faulty car to ensure the safety and extended machine life.

●Machine idle for more than three months, must be carried out quarterly checks before back into use.

●Maintenance: The maintenance of the car is generally divided into day-to-day maintenance and regular maintenance of mechanical, hydraulic, and electrical parts.

●Routine maintenance: once a day, the main content is the battery surface clean, check the power cord is firmly keep the body surface clean.

●Mechanical Maintenance: every six months once the main content is to check the various fasteners are tightened, flexible rotation of each wheel.

●Hydraulic maintenance: once every six months, whether the main check the fuel tank in a normal state, whether internal leakage and leakage of hydraulic fittings, hydraulic hose, no leakage. The hydraulic oil is clean and generally changed every **12** months with hydraulic oil.

●Electrical maintenance: once every three months, battery terminals are clean, as otherwise the terminals clean and coated with a little Vaseline properly tightened. Last check various electrical connectors are reliable, the switch is normal, and check the electrical insulation is normal. (Electrical parts and body insulation resistance should be greater than **0.5Ω**).

Ⅸ. Faults and troubleshooting

NO.	FAULT	CAUSE ANALYSIS	WORKAROUND
01	Platform can not rise	Overload to use	**Reduce load**
		Lifting cylinder normal internal leakage	**Replace the seals**
		Hydraulic oil is not enough	**Add appropriate amount of clean hydraulic oil**
		Battery voltage is not enough	**Charging**

		Emergency stop button is not opened or damaged	**Turn on the switch or repair**
		Damage to the oil pump motor	**Repair or replacement**
		Pump suction pipe clogged	**Clean up the suction pipe**
02	Platform can not be dropped	Mast overload deformation	**Repair or replacement**
		Back hole clogging	**Clear up**

Ⅹ. Maintenance record form

Maintenance or failure of the project	Maintenance Content	Maintenance personnel	Overhaul date